Pentair Water
Pool and Spa™

LEGEND® II

Pressure Side Pool Cleaner

Installation Guide

IMPORTANT SAFETY INSTRUCTIONS

READ AND FOLLOW ALL INSTRUCTIONS

SAVE THESE INSTRUCTIONS

Customer Service

If you have questions about ordering Pentair replacement parts, and pool products, please use the following contact information:

Customer Service (8 A.M. to 5 P.M. — Eastern and Pacific Times)

Phone: (800) 831-7133

Fax: (800) 284-4151

Technical Support

Sanford, North Carolina (8 A.M. to 5 P.M. — Eastern Time)

Phone: (919) 566-8000

Fax: (919) 566-8920

Moorpark, California (8 A.M. to 5 P.M. — Pacific Time)

Phone: (805) 523-2400 (Ext. 6502)

Fax: (805) 530-0194

Web site

visit *www.pentairpool.com* and *www.staritepool.com* to find information about our products

© 2005 Pentair Water Pool and Spa, Inc. All rights reserved.

This document is subject to change without notice.

1620 Hawkins Ave., Sanford, NC 27330 • (919) 566-8000
10951 West Los Angeles Ave., Moorpark, CA 93021 • (805) 523-2400

Trademarks and Disclaimers. The *Pentair Water Pool and Spa logo* is a trademark of Pentair Water Pool and Spa, Inc. The *Legend II logo* is a registered trademark of Pentair Water Pool and Spa, Inc. Other trademarks and trade names may be used in this document to refer to either the entities claiming the marks and names or their products. Pentair Water Pool and Spa, Inc. disclaims any proprietary interest in trademarks and trade names other than its own.

LEGEND® II

LX 2000G

Important Information:

The Legend® II automatic pool cleaner comes ready to connect into a female threaded 1-1/2" dedicated return line. Other connections are possible, but they require additional fittings. For more information, please contact our Technical Support Department at 1-800-831-7133. Also, if you have a chlorinator, solar system or other air inducing equipment, please contact our Technical Support Department before you install the Legend® II.

The following are important facts to remember before installing and operating the Legend® II.

1. Always disconnect the Legend® II from the pool wall when cleaning or back washing the pool filter.
2. After cleaning or back washing, let the filtration system run for at least five minutes before reconnecting the Legend® II.
3. New plumbing lines should be flushed out before installing the Legend® II.
4. The Legend® II should not be used to remove plaster dust in new pools.
5. Always remove the Legend® II before swimmers enter the pool.
6. Always handle the Legend® II with care. Do not let children or pets play with the unit: it is not a toy.
7. Always pick up the Legend® II by the Vacuum Tube especially when lifting the unit out of the water.
8. Unless checking the wheel RPM, do not handle the Legend® II while it is operating.
9. Always remove the Legend® II from the pool before chemical shock treatments. As a rule, any pool water that is unsafe for swimming is unsafe for the Legend® II.
10. Carefully cut the feed hose following the instructions on Page 3.

By following these simple guidelines, you can help protect against injury and prolong the life of your Legend® II.

Before the Legend® II is installed, please take a moment to record the serial number. This number is located on your warranty card and on the back of the Legend® II near the rear jet. You will be asked this number when you contact our Technical Support Department.

SERIAL #_____

TABLE OF CONTENTS

I. Introduction 1
- A. Thank You for Choosing the Legend® II 1
- B. What to Expect from the Legend® II 1

II. Installation Instructions 2
- A. Legend® II Components 2
- B. Pool Connections 2
- C. Installing the Twist Lock Pressure Relief Valve (Wall Fitting) 2
- D. Pressure Testing Instructions 3
- E. Cutting the Feed Hose 3
- F. Hooking Up the Legend® II 4
- G. Checking Operation 4
- H. Fine Tuning the Legend® II 5
  1. Thrust Jet Adjustment 5
  2. Sweep Hose Adjustment 5
  3. Checking Wheel RPM 5

III. Operation & Periodic Maintenance 7
- A. Connecting/Disconnecting the Legend® II 7
- B. Turning the Legend® II On/Off 7
- C. Cleaning the Sand & Silt Bag 7
- D. Periodic Maintenance 7
  1. Wall Fitting Screen 7
  2. Tires & Bearings 8
  3. Roller Rings 8
  4. Debris Bags 8
  5. Sweep Hose 8
  6. Debris Valve 8
- E. Back Washing the Pool Filter 8
- F. Storage and Winterizing 9
- G. Accessories 9
  1. Leaf Bag 9
  2. Step Adapter 9

IV. Troubleshooting and Performance Tips 10-12

Legend® II Parts List 13-14

Legend® II Exploded View 15

I. Introduction

A. Thank You for Choosing the Legend® II Pool Cleaner

Congratulations on the purchase of your new automatic pool cleaner. The Legend® II is designed to give you years of dependable and efficient service. With the Legend® II, you and your family will spend more time relaxing and enjoying your pool and less time cleaning it.

The Legend® II has been designed and built with time proven features and patented innovations to create an automatic pool cleaner that will give you years of dependable service. The Legend® II is built with pride in the U.S.A., by people who care about the product using state of the art materials and backed by a limited warranty that protects against defects in parts and construction.

Like any mechanical device, the Legend® II requires some preventative maintenance and the replacement of certain working parts. We recommend that you have your Legend® II checked annually. For best results have your Legend® II installed by a qualified swimming pool professional.

For pool owners with plumbing and mechanical experience, installation instructions are included in this manual.

Please put safety first! Be sure to take your Legend® II out of your pool and store it carefully in a shaded area before anyone enters the pool.

B. What to Expect from the Legend® II

When operating correctly, the Legend® II will travel randomly throughout the pool, vacuuming and sweeping the bottom. The climbing ability of the Legend® II is dependent on the pools shape. It will climb better in pools without sharp angles or curves in the transition from the pool floor to the pool wall.

The Legend® II comes equipped with a Wall Fitting (Part# LXW22) that features a Twist Lock Automatic Pressure Relief Valve. If the Legend® II is receiving too much water pressure to the unit, the relief valve will automatically reduce water pressure.

Approximately every three minutes and 30 seconds the Legend® II will go into a back up mode. At this time the Back Up Valve will pull the Legend® II away from problem areas.

Occasionally some vinyl pools have steps installed so the unit may not climb and remains stationary until the Back Up Valve pulls the unit away from the steps. When this occurs you need to use the optional Step Adapter (Part# EU13) to prevent wearing the vinyl liner.

The Sweep Hose operates in a gentle sweeping motion to prevent debris from becoming trapped in hard to reach corners of the pool.

II. Installation Instructions

A. Legend® II Components

The Legend® II Box Contains:

1. Cleaner Head
2. Sand & Silt Bag
3. Sweep Hose
4. Complete Feed Hose
   a. 1 - 18 in. hose
   b. 1 - 2 ft. hose
   c. 1 - 4½ ft. hose
   d. 3 - 6 ft. hoses
   e. 1- Back-Up Valve
   f. 4 - Swivels
   g. 1 - Wall Fitting
   h. 12 - Mender Nuts
   i. 7 - Hose Floats
   j. 1 - Pressure Tester

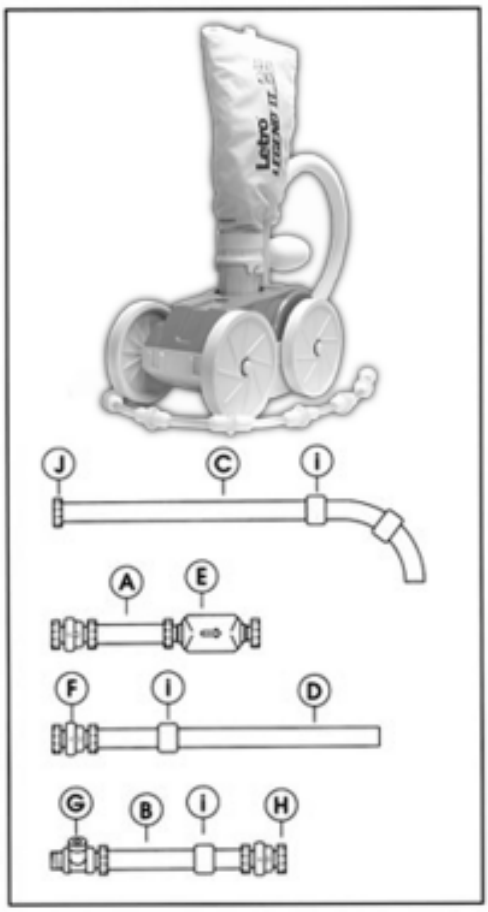

B. Pool Connections

The Legend® II comes equipped to connect to a female threaded 1-1/2" dedicated return line. An adjustable gate valve with a pressure gauge should be installed to allow a regulated amount of water flow from your pool system to the Legend® II. For more information contact our Technical Support Department at 1-800-831-7133.

Also, if the pool doesn't have a dedicated cleaner line please contact our Technical Support Department also.

C. Installing the Twist Lock Pressure Relief Valve (Wall Fitting)

1. Take out any existing pool cleaner and/or wall fitting.
2. Turn on the filtration pump and flush out the plumbing line.
3. Turn off filter pump
4. Remove the Wall Adapter from the Wall Fitting and screw Adapter by hand into the dedicated line. Turn until tight.

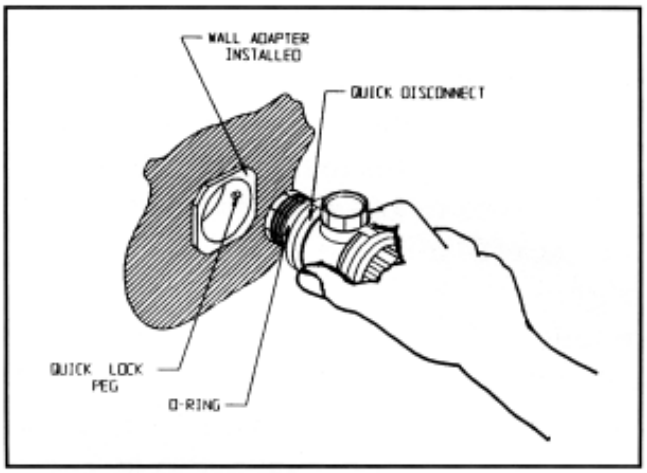

5. Take the Wall Fitting and Twist Lock the Wall Fitting into the Wall Adapter 1/4 turn; to a snug fit. Once the Wall Adapter is secure you can now twist lock and unlock to remove Wall Fitting with ease from the Wall Adapter.

D. Pressure Testing Instructions

1. Make sure the pool filter is clean before conducting this pressure test.
2. Twist lock the Wall Fitting with Feeder Hose into the Wall Adapter.
3. Have someone hold the Pressure Tester end of the Feed Hose beneath the water while you turn on the pool pump. Continue holding the hose under the water and cover the large hole of the pressure tester.
4. Reach down and feel around the Pressure Relief Valve on the Wall Fitting to see if the Relief Valve is releasing any water pressure. If valve is releasing water pressure go on to section E. *If it is not*, the pool filtration pump may not have sufficient amount of water pressure to operate the Legend® II.

BEFORE YOU GO TO THE NEXT STEP, CONTACT OUR TECHNICAL SUPPORT DEPARTMENT AT: 1-800-831-7133

E. Cutting the Feed Hose (See Hose Diagram on Page 11)

The Hose assembly comes in 6 sections covering approximately 30 ft. of the pool, which provides ample hose for most residential pools. For larger or smaller pools see Page 12 for instructions for *Adding or Deleting Additional Feeder Hose*.

1. Take Feeder Hose out of box and lay the hose straight in the sun for one day if possible, (this will take any memory out of the hose due to being coiled up in the box).
2. With the pool pump on, hold the free end of the Feeder Hose underwater. Gently pull the hose to the farthest end of the corner of the pool, *do not stretch the hose*. (The Legend® II usually will not climb the top step, so you do not need to include it in the measurement.) If the hose just reaches the farthest point of your pool, and without any excess hose hanging over the deck, then go to Section F.
3. If the Feeder Hose extends past the farthest end of the pool, mark the excess hose hanging over the deck, turn off your pool pump, and cut first 6 ft. section of hose, closest to the wall, the length of excess.
4. **IMPORTANT:** *Please double check the hose length* to insure you will be getting the maximum performance from your pool cleaner. The hose lengthens when under pressure (when your pump is on).

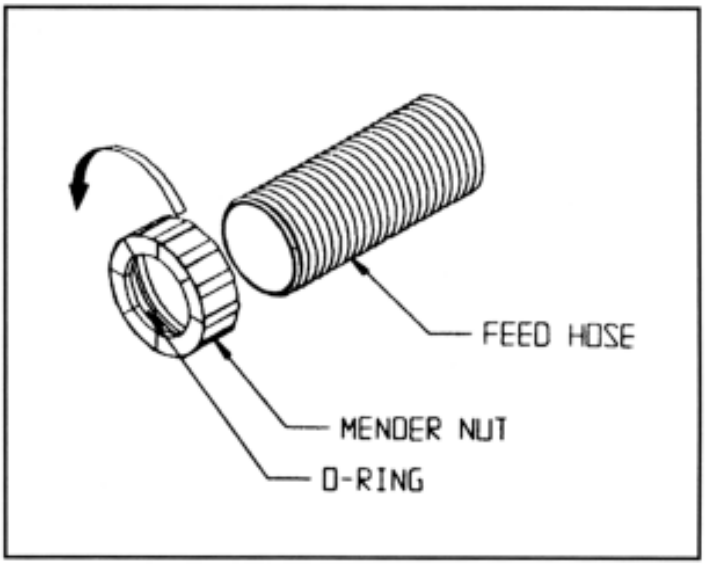

F. Hooking up the Legend® II

1. Remove the Pressure Tester from the free end of the Feeder Hose by unscrewing the Hose Nut. Left hand thread (reverse), (see illustration previous page).
2. Place mender nut on Legend® II Swivel Mast. Connect the open end of the Feed Hose to the top of the Legend® II Swivel Mast and secure with the mender nut. The arch of the Feed Hose should align in the same direction as the Swivel Mast, there should be no twist in the Feed Hose after connection. (See illustration below.)

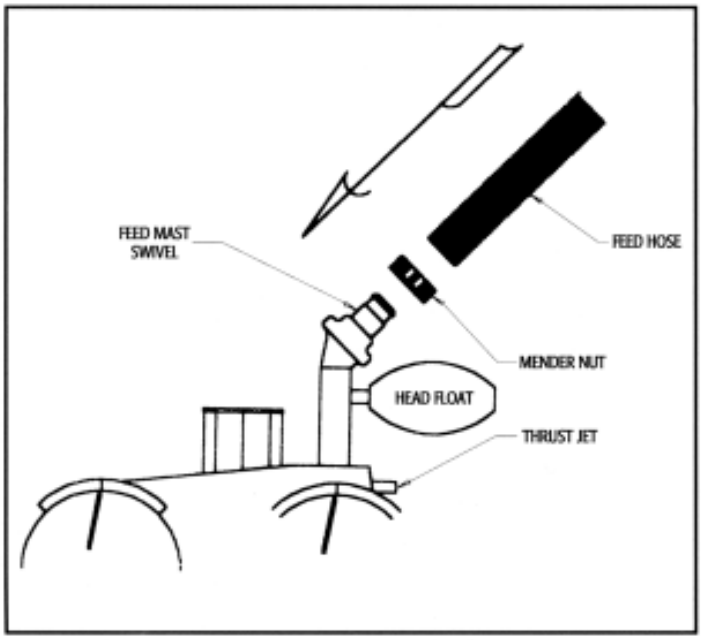

3. Carefully twist lock the Sand & Silt debris bag onto the top of the Legend® II Vacuum Tube. Make sure there is a Rubber Debris Valve attached to the top of the Vacuum Tube before locking on the Sand & Silt bag, (this valve is similar to a check valve to help keep debris inside the bag when the water pressure is off).
4. Gently place the Legend® II in the pool. Turn on the pool filtration pump.
5. Check to make sure the wheel RPM is between 25-32. See page 5 for instructions on wheel RPM.

G. Checking Operation

When operating correctly, the Legend® II will travel in a random pattern throughout the pool, vacuuming and sweeping the bottom. The climbing ability of the Legend® II is dependent on the pools structure and water flow coming into the pool. It will perform more efficiently in pools without sharp angles or curves in the transition from the floor of the pool to the wall.

The Legend® II comes with a Twist Lock Pressure Relief Valve (Wall Fitting). If the Legend® II is receiving too much water pressure, the Pressure Relief Valve in the Wall Fitting will release the excess water pressure.

Approximately every three minutes and 30 seconds the Legend® II will go into a back-up mode. The Back-Up Valve cycle time, while in the back-up mode, is approximately 30 seconds, pulling the Legend® II from problem areas.

The Sweep Hose operates in a gentle sweeping motion to prevent debris from becoming trapped in hard to reach corners of the pools.

If the Legend® II does not travel to all areas of the pool, turn off the pool filtration pump and make the necessary adjustments from the instructions on the next page.

H. Fine Tuning the Legend® II

1. Thrust Jet Adjustment

There are two Thrust Jets located in the back of the Legend® II. These Thrust Jets alter the direction of the cleaner. The factory standard position for the jets is set slightly to the right. (See illustration below.)

In certain pools, altering the thrust jets can increase performance of the Legend® II. Moving the thrust jets up can increase climbing, and moving them down can decrease climbing. Moving the thrust jets to the left pushes the unit left and moving them to the right pushes the unit right.

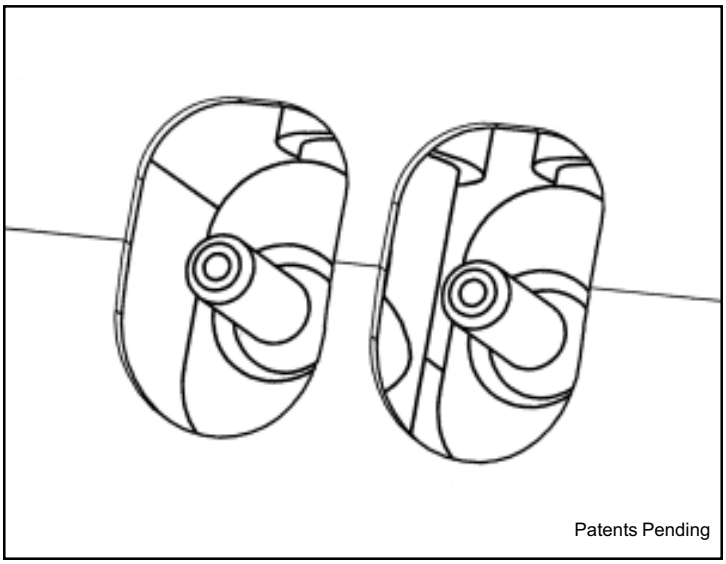

2. Sweep Hose Adjustment

The Sweep Hose operates in a gentle sweeping motion. To increase or decrease the motion of the Sweep Hose, adjust the screw located on the Swivel Mast Barb below the Ballast Float. Turning the screw clockwise will decrease the motion and counter clockwise to increase the motion of the Sweep Hose.

3. Checking Wheel RPM

To determine whether the Legend® II is receiving the proper water pressure, turn off the pool pump, and carefully remove the Legend® II from the pool.

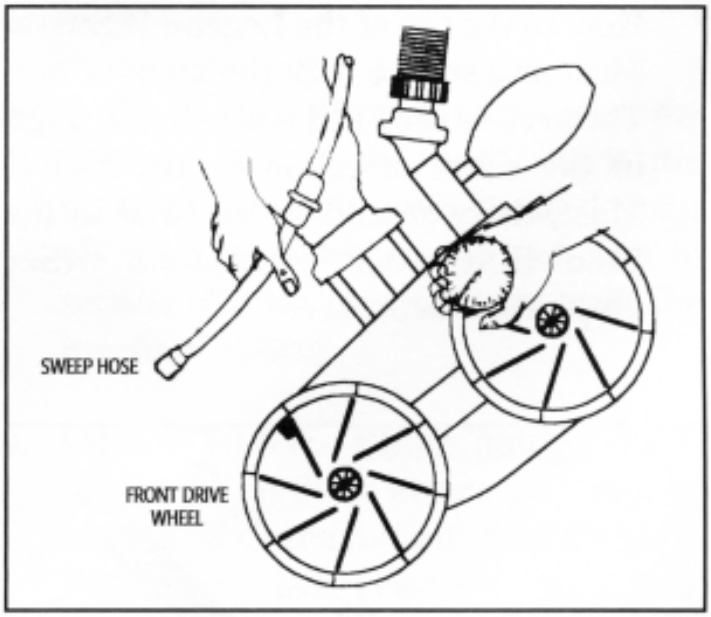

Mark the front drive Tire/Wheel with a marker, or use the Logo located on the side of tire as a marker to count the rotations of the wheel per minute.

Have someone turn on pool pump while you place the Legend® II in the pool just beneath the water surface. (Be sure to hold onto the Sweep Hose to avoid getting wet.)

Count the rotations of the marked wheel for exactly one minute. (Be sure the Back-Up Valve isn't cycling at this time.) The rotations will give you the Revolutions Per Minute, (RPM).

For proper performance, the Legend® II operates between 25-32 RPM. If the RPM is below 25 then closely follow the instructions on the next page.

3. Checking RPM - (cont.)

1. Clean the Screen located inside the Wall Fitting. A small amount of debris will significantly affect the performance of the cleaner.
2. Clean the skimmer basket, pump basket and pool filter.
3. If an adjustable Gate (3-way) Valve has been installed, adjust the valve to increase water flow to the Legend® II.
4. If the RPM is more than 32, at the Wall Fitting, unscrew the Pressure Relief Valve slowly until the RPM falls between 25-32. Again, if an adjustable gate (3-way) valve has been installed, adjust the gate valve to decrease water flow to the Legend® II.
5. If you continue to have problems with either the water flow or obtaining the specified water pressure to operate the Legend® II, call your Professional Pool Dealer.

If you have any additional questions, please contact Pentair Water Pool and Spa, Inc., Technical Support Department at: 1-800-831-7133, Monday through Friday.

III. Operation/Periodic Maintenance

A. Connecting/Disconnecting the Legend® II

Turn off pool pump. Then take the Wall Fitting and twist lock the Wall Fitting clockwise into the Wall Adapter. To disconnect the Legend® II, unlock and twist counter clockwise. The Wall Adapter should remain in the pool wall.

B. Turning On/Off the Legend® II

The Legend® II operates off a filtration pump coming from the equipment pad, and can be turned on or off by merely turning on/off your pump time clock.

C. Cleaning the Sand & Silt Bag

Carefully unlock the debris bag from the vacuum tube and open the Velcro® Brand fastener at the top of debris bag and dump debris.

If you have a lot of debris in your pool, especially after a storm, you can run your Legend® II in two shorter cycles per day and empty the debris bag between cycles.

Reconnect the debris bag to the vacuum tube. Do NOT over turn.

If the Velcro® Brand fastener on top of the debris bag does not stay secure, rinse well, let it dry and clean with a stiff brush.

A Helpful Hint: It is easier to empty the debris bag when it is dry. A second bag may be used while the full debris bag is drying.

It's best to empty the debris bag when it becomes half full. The Legend® II will have better performance if the bag is not overloaded.

D. Periodic Maintenance

The following parts are wear items that should be checked, maintained or replaced as needed. Wear items are considered any working or moving part(s) being worn due to the use of the cleaner. ***Wear items are not covered under warranty.***

1. Wall Fitting Screen

Inside the wall fitting is a filter screen that acts as a secondary filter. This screen is to keep debris that is passed by the pool filter out of the Legend® II. *Running the Cleaner without the filter screen can damage the Legend® II and will void the warranty.*

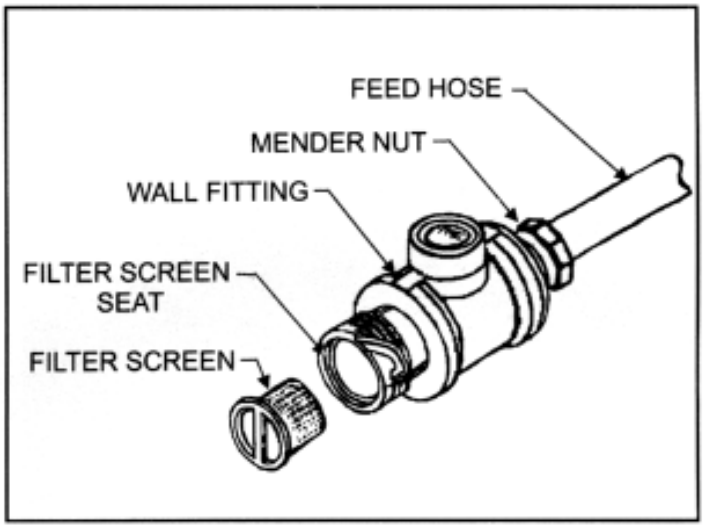

A continuous plugged or dirty screen is a sign of problems in your pool filtration system and you need to contact your local pool professional.

To clean the filter screen, pull the screen out from inside the Wall Fitting and rinse thoroughly and push back inside the wall fitting.

Whenever cleaning, back washing or repairing filter, remove the wall fitting and flush out the dedicated line before using the Legend® II.

III. Operation/Periodic Maintenance - (cont.)

2. Tires & Bearings

The tires are designed to protect the bottom of your pool and provide better traction. You need to rotate or replace the tires when edges become rounded.

The Wheel Bearings are warranted free of defects when shipped from Pentair Water Pool and Spa, Inc., and are considered a wear item. A good bearing will spin freely.

3. Roller Rings

Your Sweep Hose has a series of Roller Rings to protect the Sweep Hose. Replace the rings as needed. You can rotate the Roller Rings to prevent flat spots.

4. Debris Bags

Fine Mesh Sand & Silt Bag

The Legend® II comes with a Sand & Silt bag for general use in all pools. We do not recommend using the fine mesh bag to pick up leaves and twigs or other large debris for they have sharp points and edges that can poke holes and eventually rip the bag.

Optional Leaf Bag

The leaf bag is a larger mesh bag made to pick up heavier debris such as leaves. twigs, acorns, etc. This bag can be helpful especially after a storm.

A Helpful Hint: To prolong the life of bags, remove cleaner from pool before adding chemicals.

5. Sweep Hose

The Sweep Hose is provided to help keep the bottom and sides of your pool clean. The Sweep Hose is warranted free of defects when shipped from the factory, and is considered a wear item.

6. Debris Valve

This valve is located under the Debris Bag, it is designed to keep the debris inside the bag. It functions like a check valve to allow the debris to only enter through the bag one way. Replacement is needed when valve begins to stiffen.

E. Back Washing the Pool Filter

Always disconnect the Legend® II from the pool wall before cleaning or back washing the pool filter. After cleaning or back washing, let the pool filtration system run for a minimum of five minutes to flush out the return lines before reconnecting the Legend® II.

III. Operation/Periodic Maintenance - (cont.)

F. Storage and Winterizing

Never leave or store the Legend® II in direct sunlight. When storing the Legend® II for the winter, be sure to drain all the water from it. This is important since freeze damage is not covered under the warranty. Also, remove the Wall Fitting.

G. Accessories

1. Leaf Bag

(See previous page)

2. Step Adapter

This adapter is designed for vinyl liner pools that have steps installed in such a way that the unit may not climb and remains stationary until the Back-up Valve comes on. The adapter acts as a bumper to turn the cleaner away from the steps and continue on cleaning your pool.

It's easy to install: Simply slide the Step Adapter into one of the slots (either side) located in the front of your Legend® II and adjust to the appropriate height. (Part # for Step Adapter is EU13)

IV. TROUBLESHOOTING AND PERFORMANCE TIPS

To insure the best performance from your cleaner, follow the troubleshooting guide listed below.

A. PROBLEMS & SOLUTIONS

Problem: Legend® II doesn't move or moves sluggishly or hangs up on steps.

Solution:
1. Be sure filter and filter pump are on and working properly. (You may need to clean your pool filter system.)
2. Check to see if the skimmer and basket are clean.
3. Check the Wall Fitting screen for debris and rinse clean.
4. Check wheel RPM, (see pages 5-6).
5. Determine if the Back-Up Valve is cycling. (Hold the valve out of the water and the jet should come on for approx. 30 seconds and shut off for approx. 3 minutes and 30 seconds.)
6. Check all the Hose connections and Swivels for leaks that can cause loss of water pressure.
7. Check debris that may be jammed in the gear teeth on one of the front drive wheels. Gently rotate the front wheels backward to dislodge debris.

Problem: Legend® II flies around pool.

Solution:
1. Check wheel RPM, and if more than 32 RPM make adjustment at Wall Fitting by turning the Pressure Relief Valve slowly until RPM falls between 25-32; or if an adjustable gate valve has been installed, adjust the valve to decrease water flow.
2. Air in system, see a Pool Professional.

Problem: Legend® II will not back up.

Solution:
1. Determine if the Back-Up Valve is cycling. (Hold the valve out of the water and the jet should come on for approx. 30 seconds, and shut off for approx. 3 minutes and 30 seconds.)
2. Check the wheel RPM, (see pages 5-6).
3. Empty the debris bag if full or half full.

Problem: Legend® II will not climb.

Solution:
1. Even if your pool doesn't show algae you still need to brush the sides of the pool wall.
2. Check the wheel RPM, (see pages 5-6).
3. Reposition the Thrust Jet. Loosen the two screws to adjust the Thrust Jet.

A reminder: The climbing ability of the Legend® II is dependent on the pool's shape and available water pressure. It will climb better in pools without sharp angles or curves in the transition from the pool floor to the pool wall.

Problem: Hoses tangling.

Solution:
1. Check the length of the Feed Hose, they may be to long. (See pages 3-4.)
2. Check to see that the Feed Hose is floating on top of surface. Check hose floats for even spacing.
3. Twist the Hose Swivels to see if they spin freely and replace any that will not.
4. Lay out the Feed Hose straight in the full sun to remove any memory.

IV. TROUBLESHOOTING AND PERFORMANCE TIPS

A. PROBLEMS & SOLUTIONS - (cont.)

Problem: Sweep Hose is sucked into the cleaner.

Solution: 1. Adjust the Sweep Hose using the Adjustment Screw located on the bottom of the Swivel Mast. Turn Adjustment Screw clockwise until the Sweep Hose is in a gentle sweeping motion.

Problem: Sweep Hose breaks surface and sprays nearby windows, patio decks and bystanders.

Solution: 1. Adjust Sweep Hose to a gentle sweeping motion.

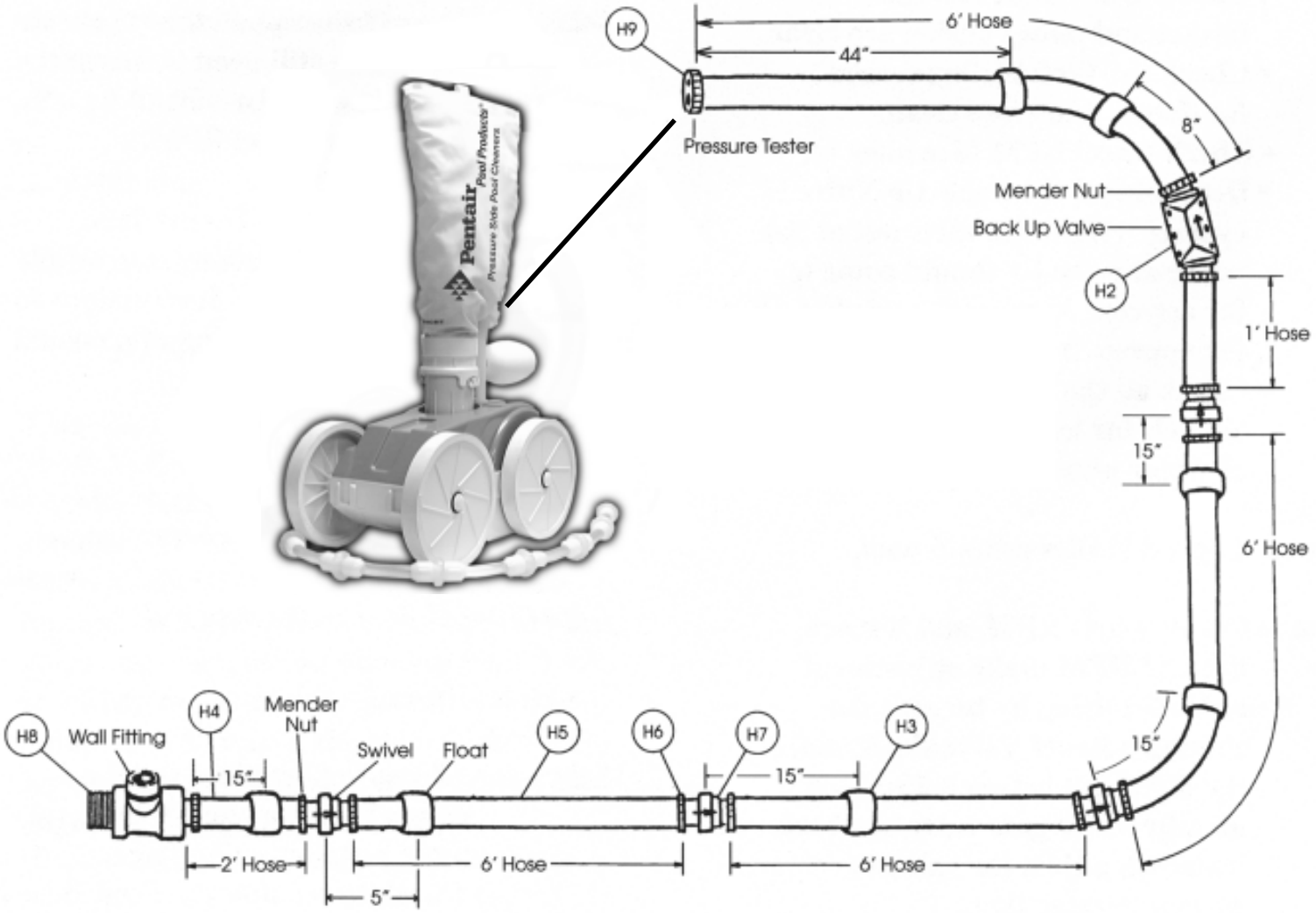

TIPS FOR CUTTING HOSE IN A SMALL POOL, AND FOR ADDING HOSES FOR LARGE POOLS

1. Tips on Hose Cutting for Larger Pools.

If the hose is short of the farthest end of the pool, add an additional section of hose (Part # LX17), one Swivel (Part # LX19), two Mender Nuts w/O-Rings (Part # LX20), and one Hose Float (Part # LXD10). See diagram below. Re-measure and follow guides on pages 3-4.

1. Tips on Hose Cutting for Smaller Pools.

If the hose hangs over the deck more than 9 ft. or the pool is less than 6 ft. deep and narrow, cut 36 in. off the 5 ft. section hose at the end of the feed hose and remove one float. Then remove one 6 ft. hose (see diagram), 1 swivel and 2 mender nuts. Re-measure and cut hose according to the guides on pages 3-4.

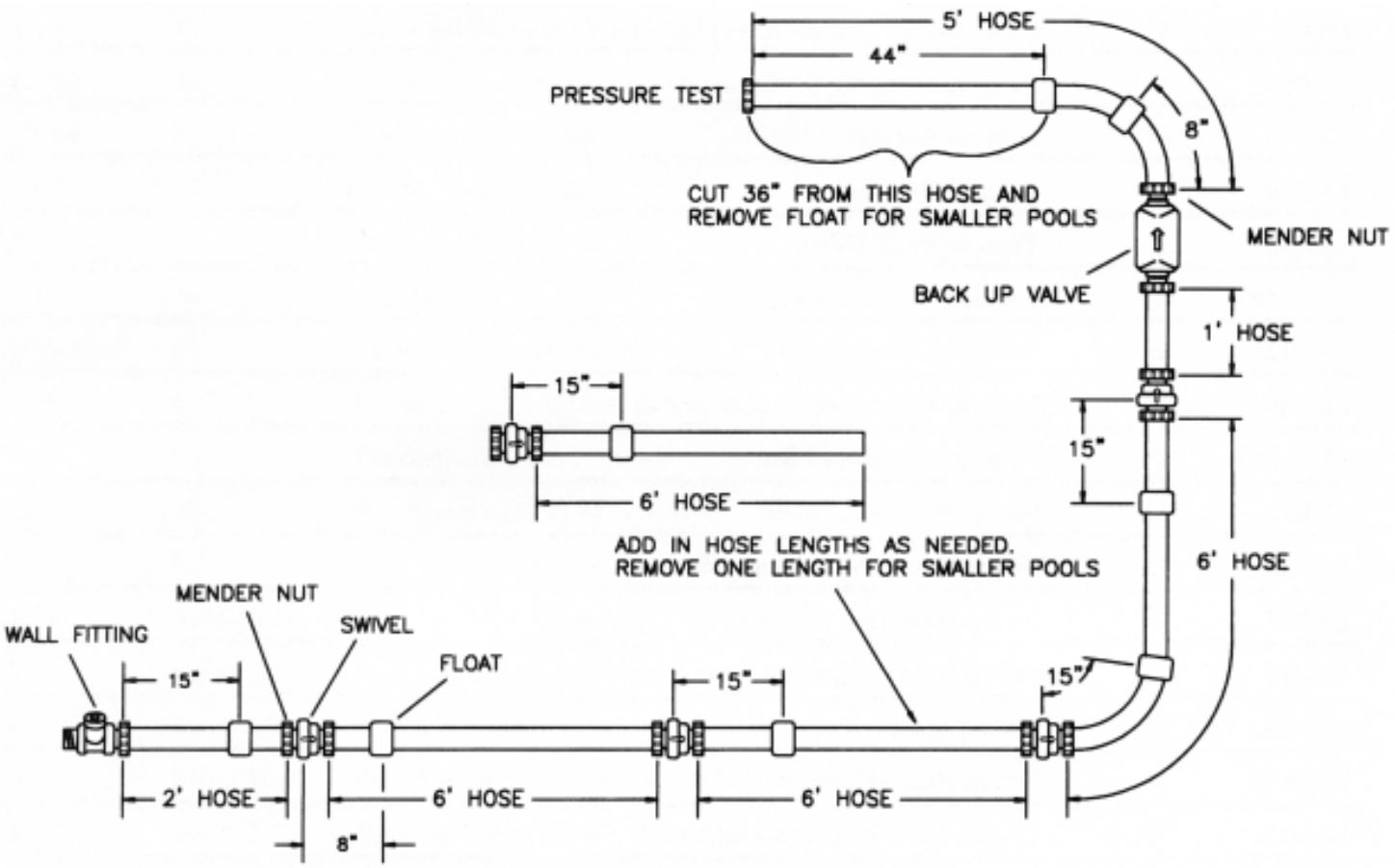

LEGEND® II PARTS LIST

Diagram #	Part #	Description	Quantity
1	LXU5	Top Cover	1
2	LXU145N	Main Frame	1
3	EU10N	Bottom Cover	1
4	LXU6	Feed Mast w/O-Ring & Swivel	1
5	EC86	Turbine Drive Shaft - Complete	1
6	EC83	Turbine Spacers	1-set
7	EC80	Turbine Bearings	2
8	EA40	Turbine Shaft Shield	1
9	LXC110	Turbine Cover w/Elbows	1
10A	EX120	Turbine Cover Hose 9"	1
10B	EC120	Turbine Cover Hose 7 3/4"	1
11	EC120	Venturi Jet Hose 7 3/4"	1
12	EB5L	Sweep Hose - Complete	1
13	EB10	Sweep Hose - Wear Ring	9
14	EB25	Sweep Hose - Jet w/Collar	1
15	EB20	Sweep Hose - Adjustment Screw	1
16	EA20	Ballast Float	1
17	EH07	Sweep Hose - Hose Sleeve	15
18	EU15	Coarse Mesh Bag (Optional)	1
19	EU16	Fine Mesh Bag	1
20	EU9	Debris Valve	1
21	EU7	O-Ring for Feed Mast	1
22	E18	O-Ring for Thrust Jet	2
23	EC130	Thrust Jet	2
24	EC135	Thrust Jet - Plate	2
25	EC65	Axle - Large Wheels	4
26	EC70	Axle Plate	4
27	EC45	Axle - Lock Washer	8
28	EC6L	Wheel w/out Bearings	4
29	EC60	Wheel Bearings Only	8
30	EC55	Wheel - Plastic Washer	4
31	LXC1	Wheel - Rubber Tire	4

LEGEND® II PARTS LIST

Diagram #	Part #	Description	Quantity
32	EB15	Hose Clamp	7
33	EA40	Screw for Turbine Bearings, Thrust Jet	8
34	EA40	Screw for Bottom Cover	2
35	EC64	Wheel - Plastic Washer	4
36	EH09C	Sweep Hose Weight (optional)	1
37	EC131	Thrust Jet Repair Kit, includes: E18, EC130, EC135	1
38	EA30	Screw for LXC110	5
39	EU76	Axle Bolt	8
40	EU147	Snap Fit Vac Tube Posts	2
41	EU79	Nut & Bolt - Feed Mast to Vac Tube	1-set
42	LXU8	Venturi Jet	2
43	EU80	Screw - Cover to Frame	2

SEE PAGE 11 FOR DIAGRAM (H2 - H9)

H2	LX10	Back Up Valve - Low Pressure	1
H2	LX11	Back Up Valve - Housing	1
H2	E12	Back Up Valve - Top Cover	1
inside H2	E13	Back Up Valve - Housing O-Ring	1
inside H2	E14	Back Up Valve - O-Ring Gear Assembly	1
H2	E15	Back Up Valve - Screw Housing Body	6
inside H2	LX16	Back Up Valve - Gear Assembly	1
H3	LXD10	Feed Hose Float	7
H5	LX17	Feed Hose - 6 ft. Section	4
H4	LX18	Feed Hose - 2 ft. Section	1
H6	LX20	Feed Hose Mender w/O-Ring #0252	12
H7	LX19	Feed Hose Swivel	4
H8	LXW22	Wall Fitting - Complete	1
Inside H8	E21	Wall Fitting Adapter	1
inside H8	E23	Wall Fitting O-ring	1
inside H8	E24	Wall Fitting Screen	1
inside H8	E25	Wall Fitting - Valve Assembly	1
H9	LX26	Pressure Tester	1

LEGEND® II
EXPLODED VIEW

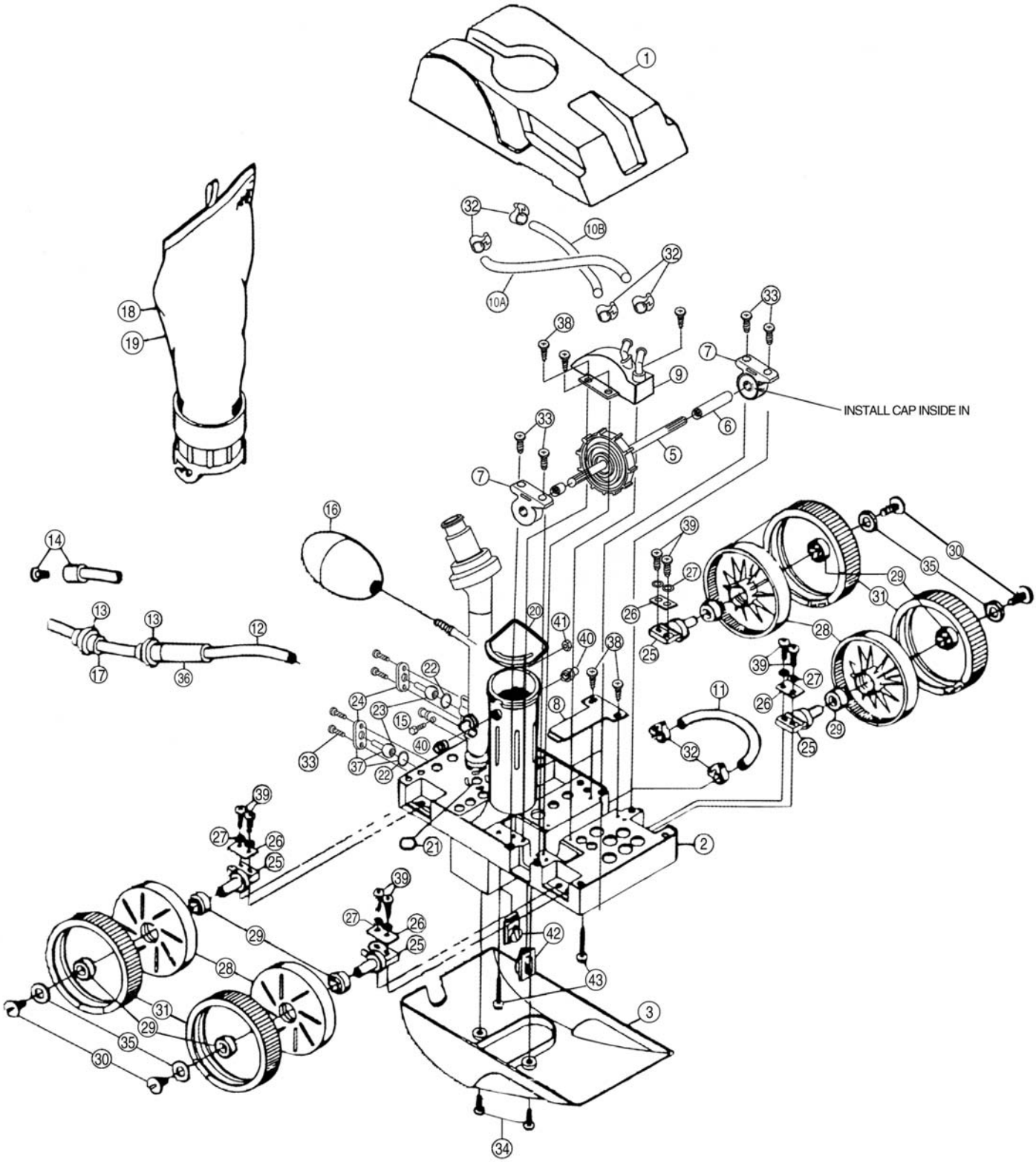

SAVE THESE INSTRUCTIONS.

Pentair Water
Pool and Spa™

7/27/05 P/N YYLXMAN REV. B
© Pentair Water Pool and Spa, Inc. All rights reserved.
Printed in USA.